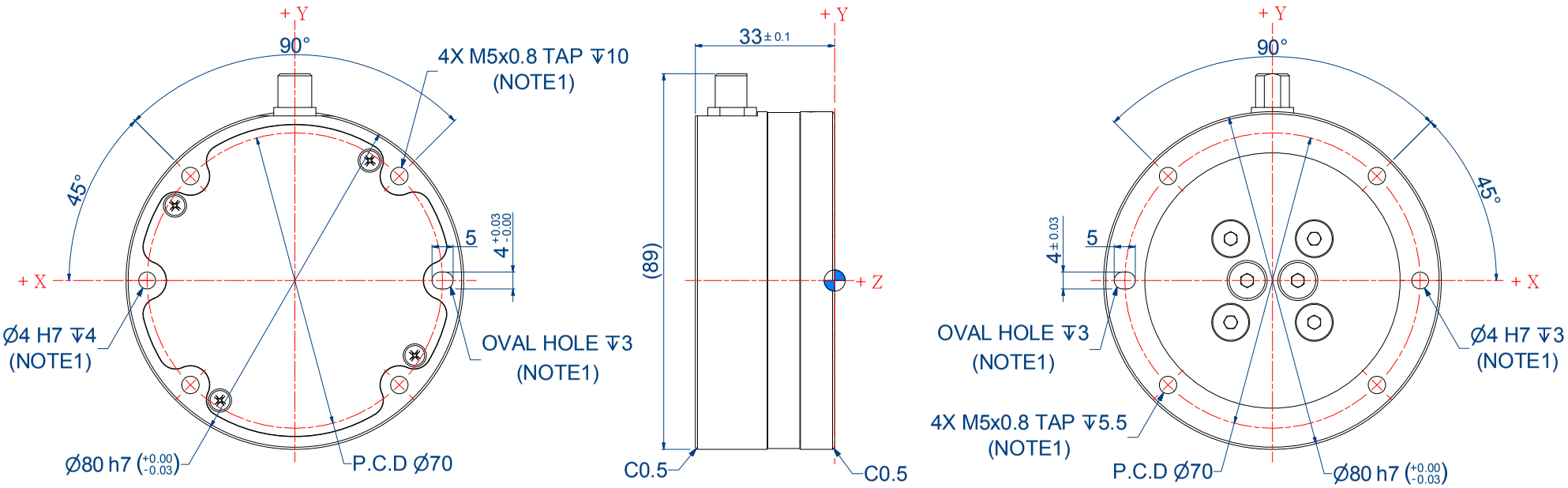

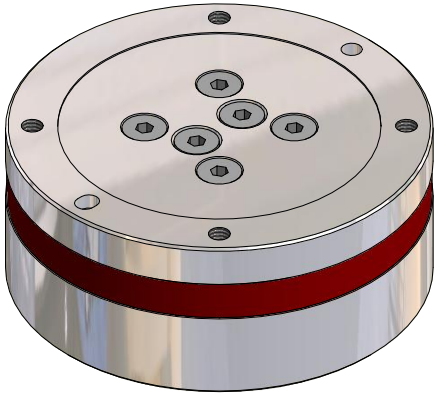

NOTES

1. Do not exceed interface depth, may cause damage.
2. Do not pull on a cable strongly.

DIMENSIONS
RFT80-6A03

PROJECTION	
DIMENSION	mm

ROBOTOUS
Advanced Technology for Human

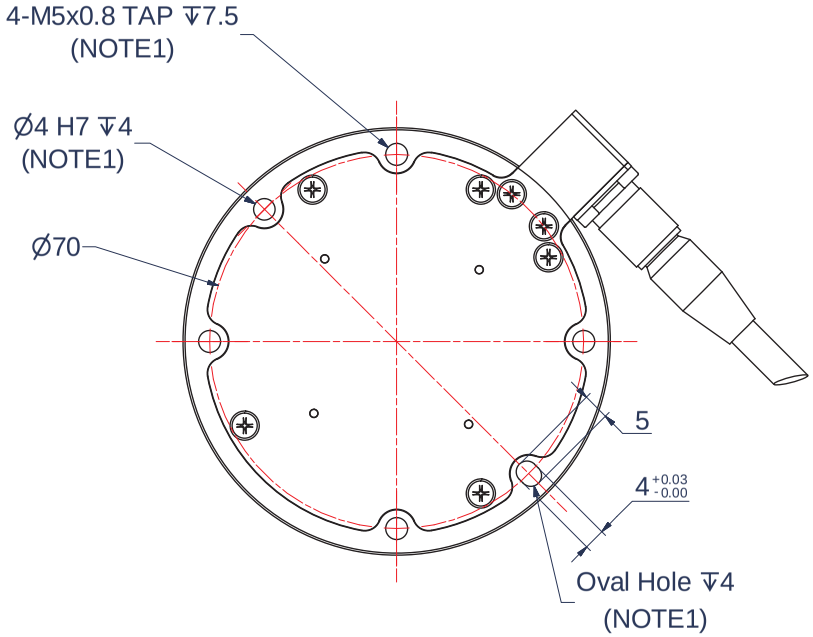

BOTTOM VIEW

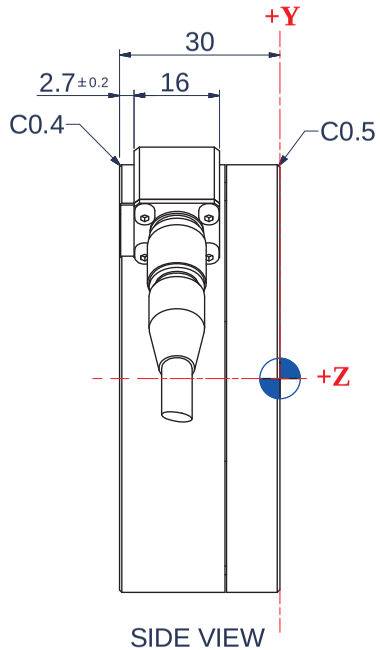

SIDE VIEW

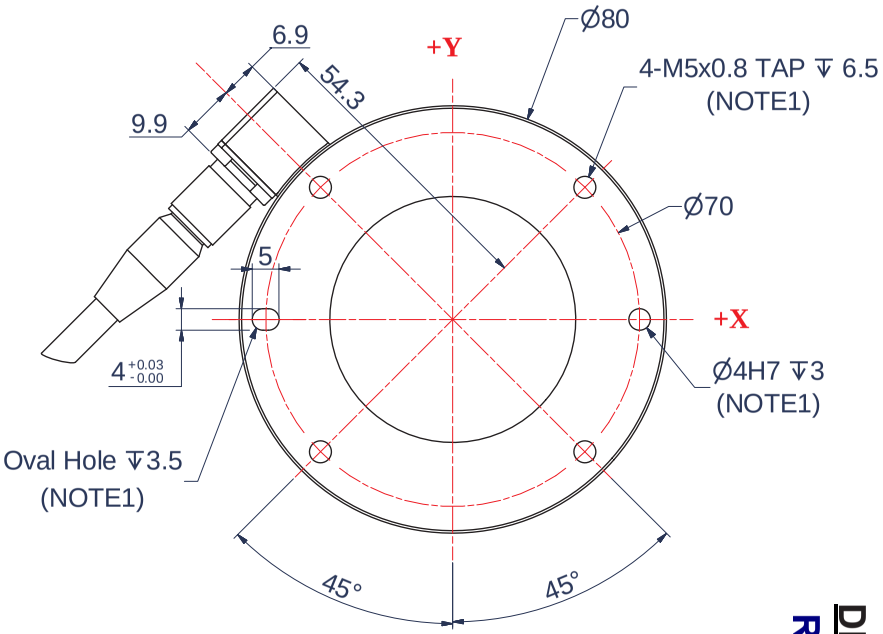

TOP VIEW

DIMENSIONS
RFT80-6A02

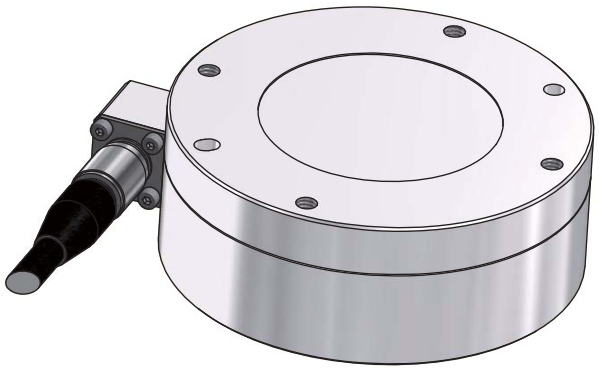

ISOMETRIC VIEW

NOTES

1. Do not exceed interface depth, may cause damage.
2. Do not pull on a cable strongly.
3.The housing has been grounded to protect it from external electric noise

PROJECTION	
DIMENSION	mm

ROBOTOUS
Advanced Technology for Human

DIMENSIONS
RFT80-6A01

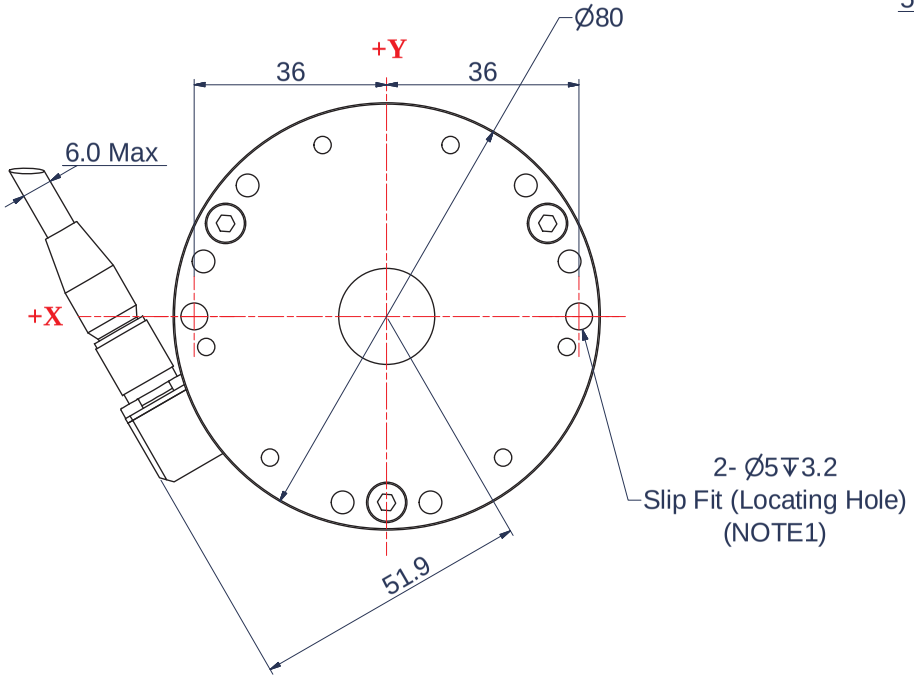

BOTTOM VIEW

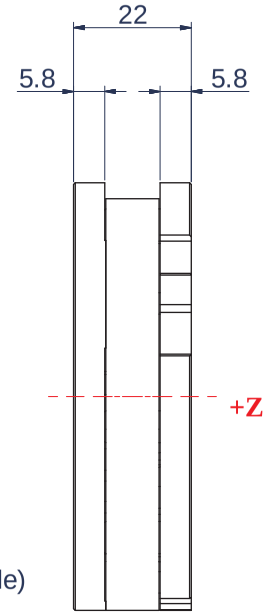

SIDE VIEW

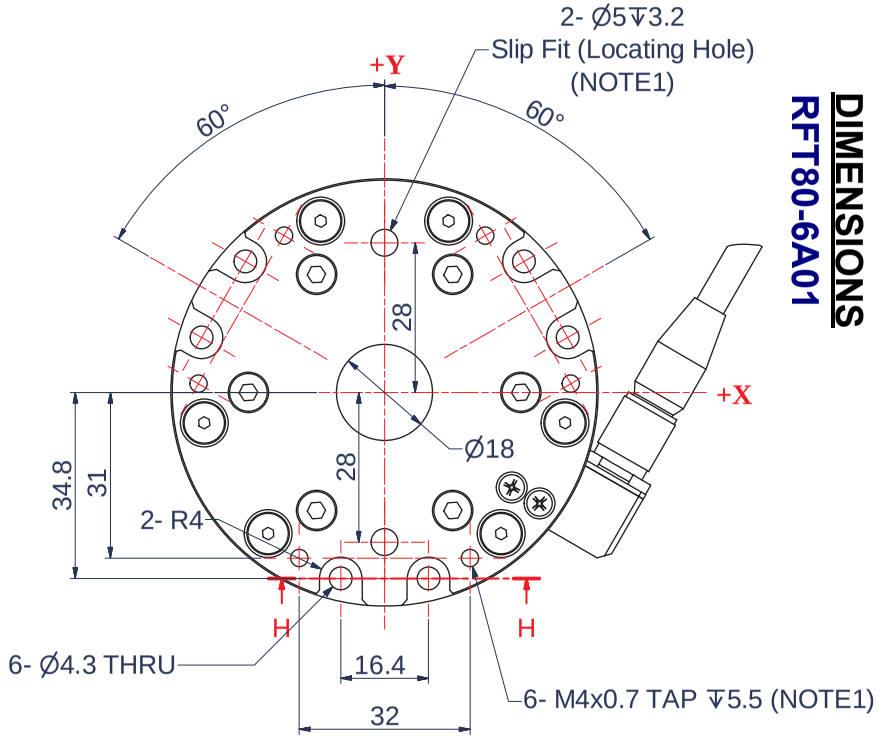

TOP VIEW

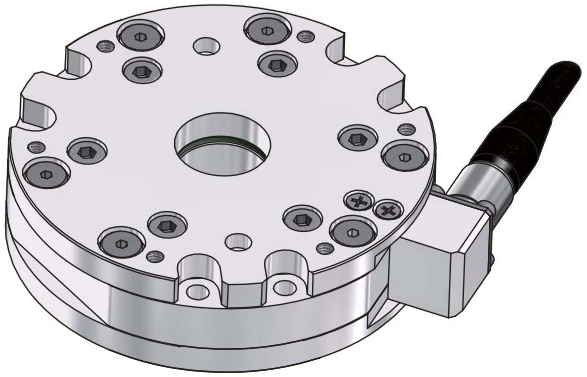

ISOMETRIC VIEW

H-H (1 : 1)

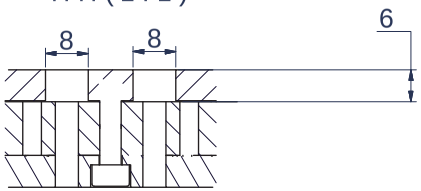

NOTES

1. Do not exceed interface depth, may cause damage.
2. Do not pull on a cable strongly.
3.The housing has been grounded to protect it from external electric noise

PROJECTION	
DIMENSION	mm

ROBOTOUS
Advanced Technology for Human

DIMENSIONS
RFT64-6A01

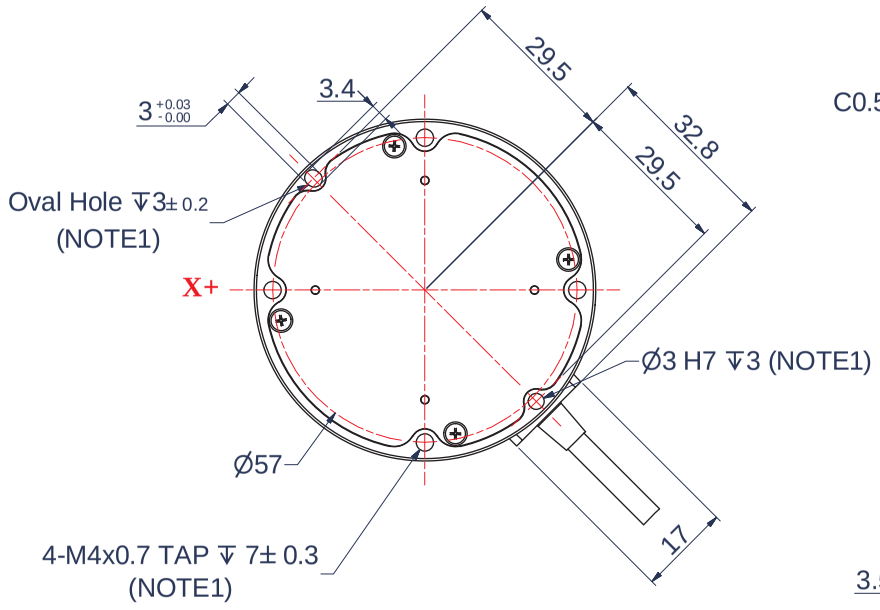

BOTTOM VIEW

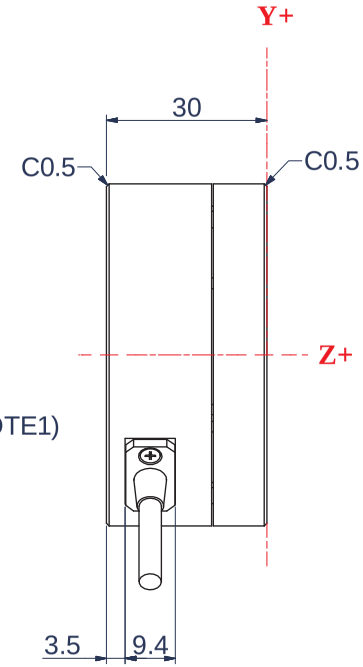

SIDE VIEW

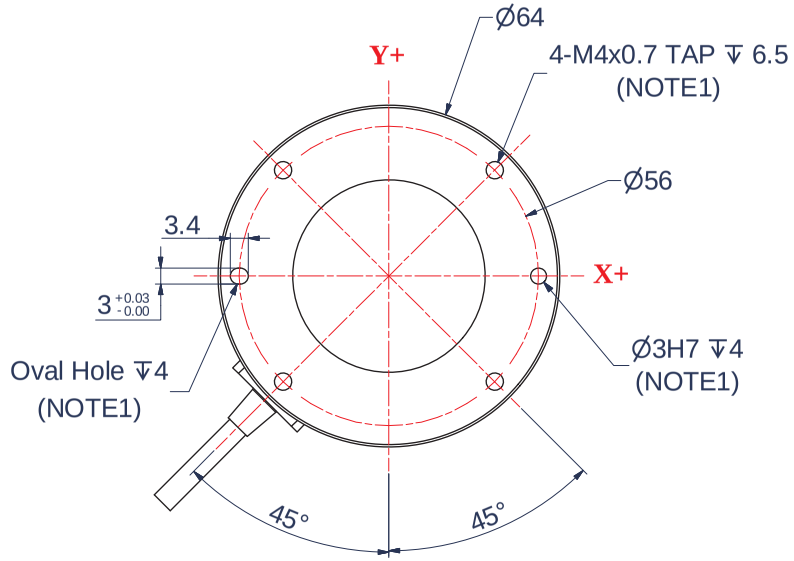

TOP VIEW

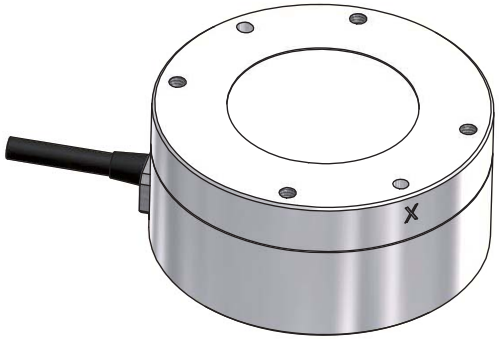

ISOMETRIC VIEW

NOTES

1. Do not exceed interface depth, may cause damage.
2. Do not pull on a cable strongly.
3.The housing has been grounded to protect it from external electric noise

PROJECTION	
DIMENSION	mm

ROBOTOUS
Advanced Technology for Human

DIMENSIONS
RFT64-SB01

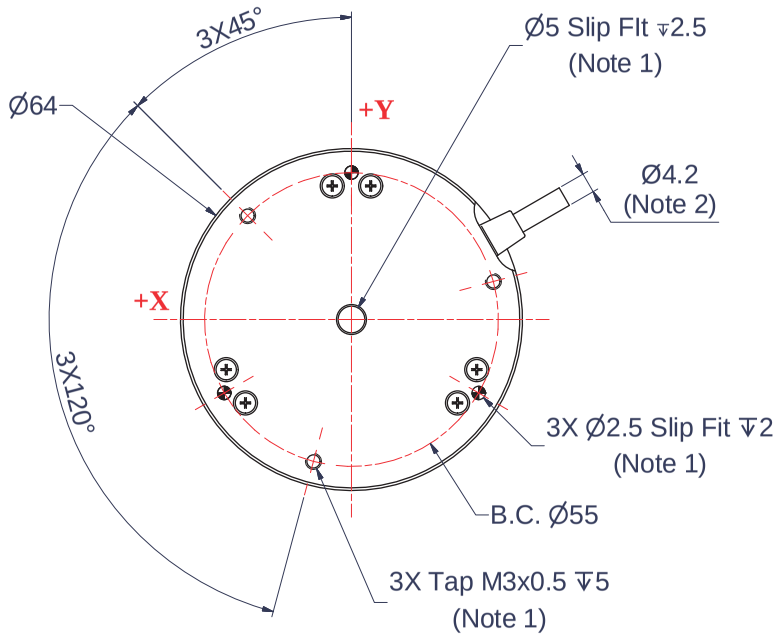

BOTTOM VIEW

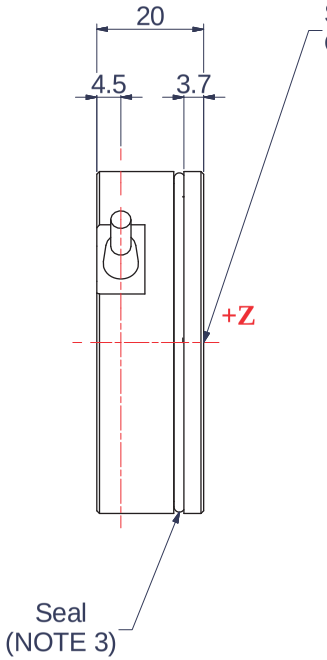

SIDE VIEW

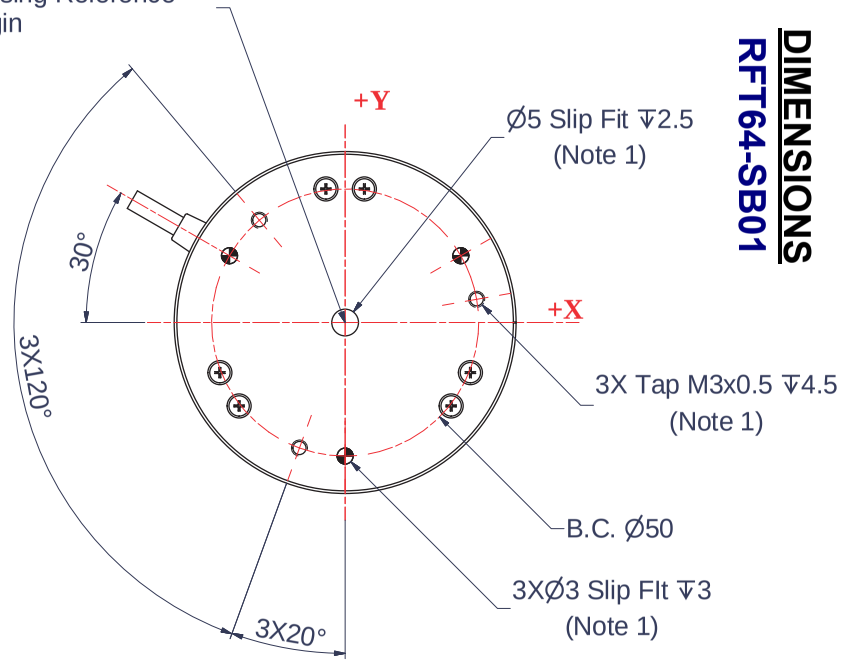

TOP VIEW

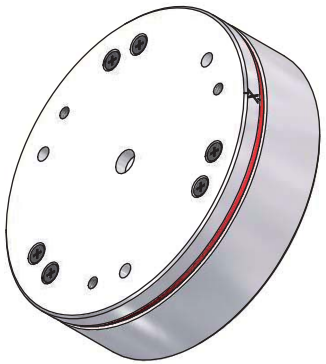

ISOMETRIC VIEW

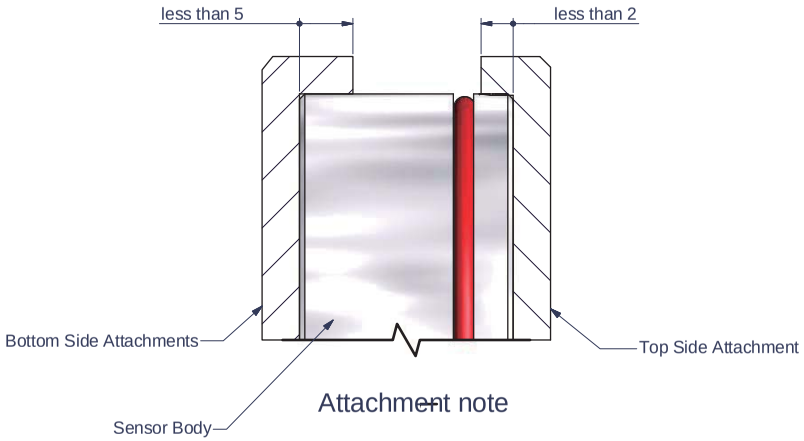

Attachment note

NOTES

1. Do not exceed interface depth, may cause damage.
2. Do not pull on a cable stronly.
3. Do not take off a seal
   If seal is taken off, sensor loses the characteristic
4.The housing has been grounded to protect it from external electric noise

PROJECTION	
DIMENSION	mm

ROBOTOUS
Advanced Technology for Human

DIMENSIONS
RFT60-HA01

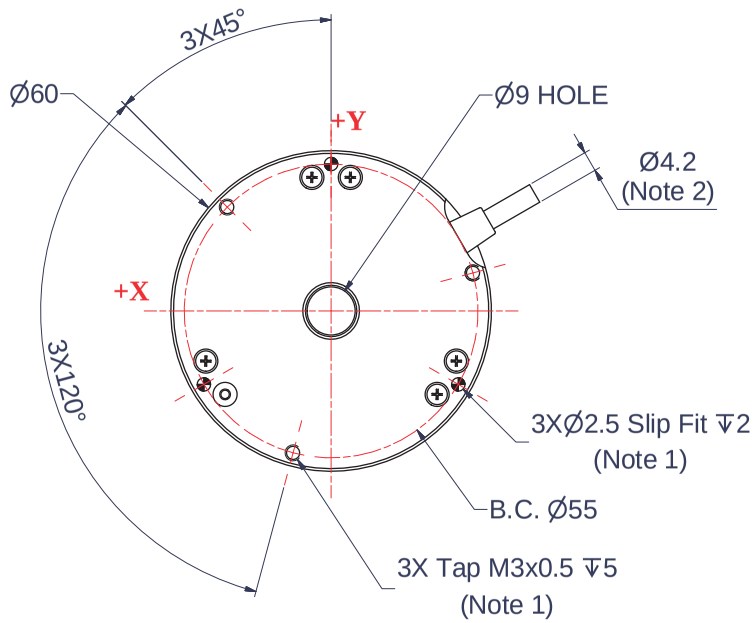

BOTTOM VIEW

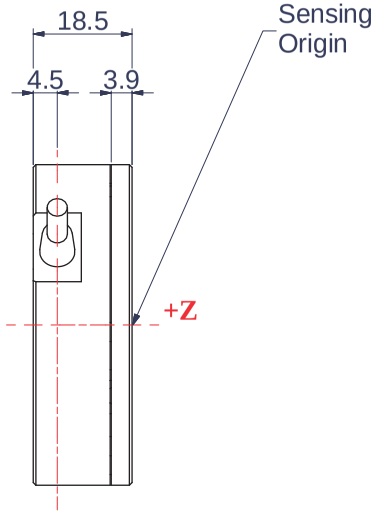

SIDE VIEW

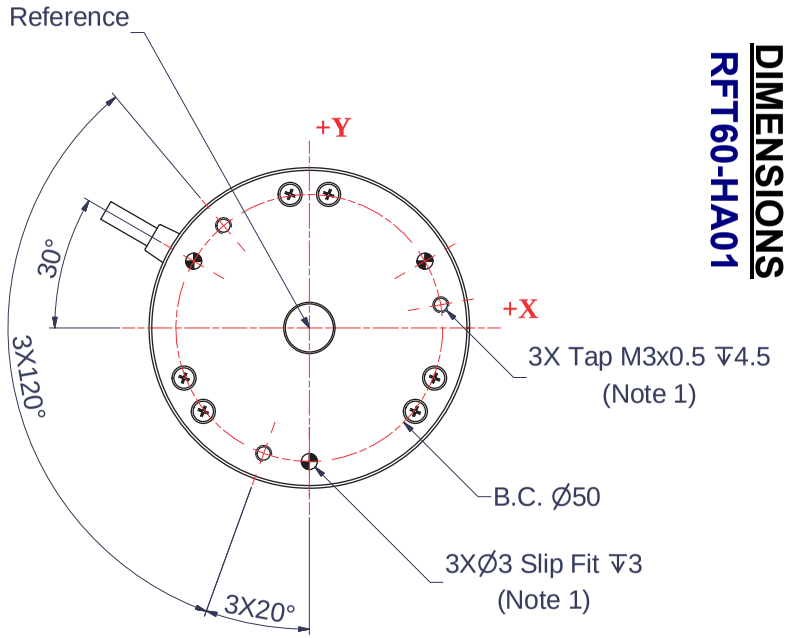

TOP VIEW

ISOMETRIC VIEW

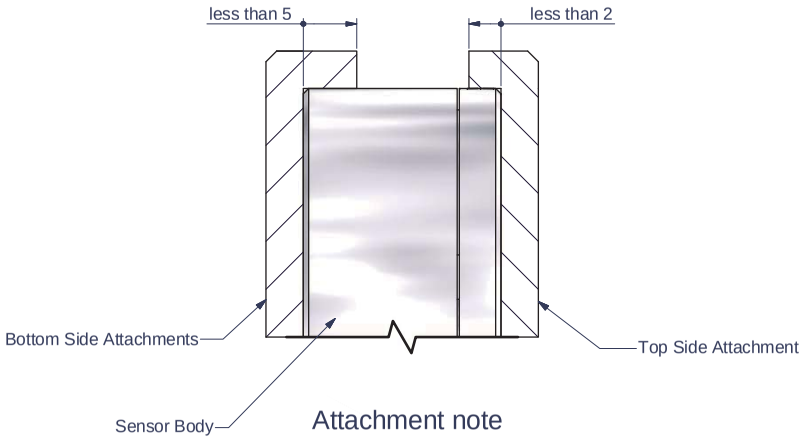

Attachment note

NOTES

1. Do not exceed interface depth, may cause damage.
2. Do not pull on a cable stronly.
3. The housing has been grounded to protect it from external electric noise

PROJECTION	
DIMENSION	mm

ROBOTOUS
Advanced Technology for Human

DIMENSIONS
RFT44-SB01

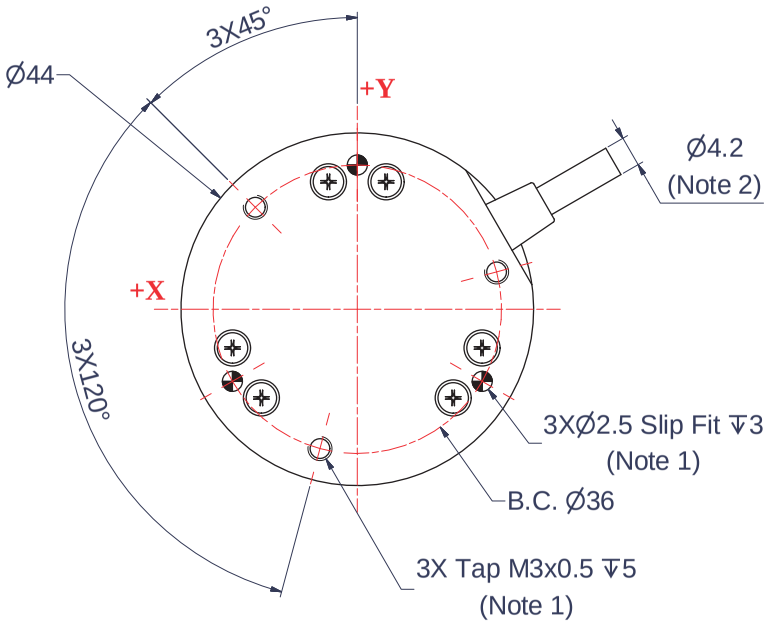

BOTTOM VIEW

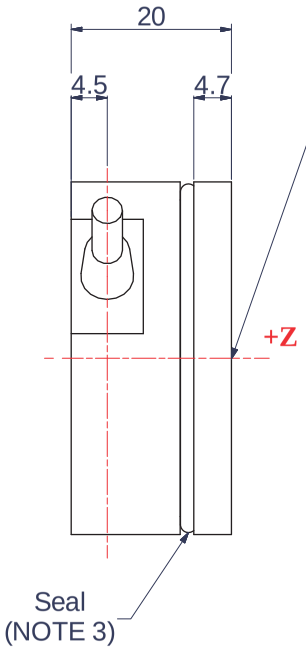

SIDE VIEW

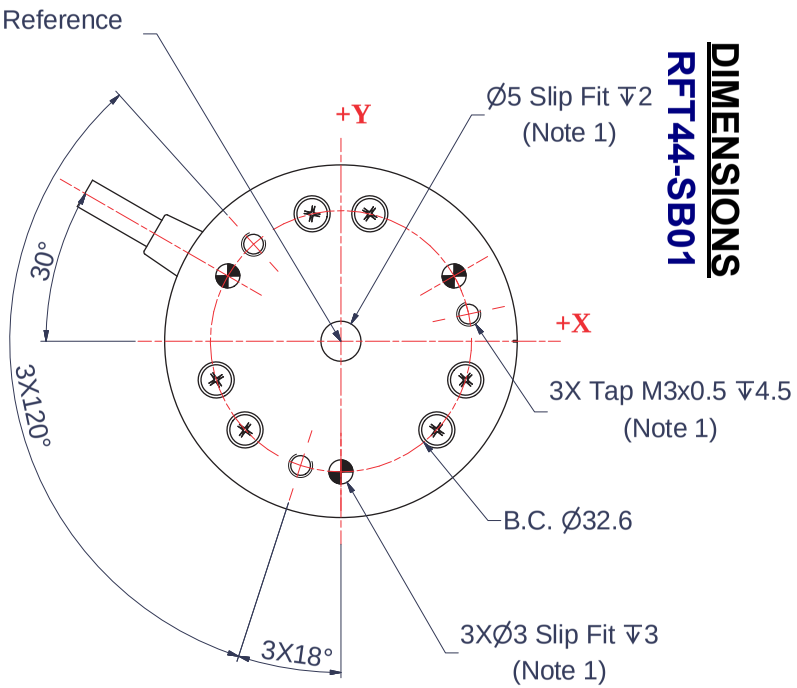

TOP VIEW

ISOMETRIC VIEW

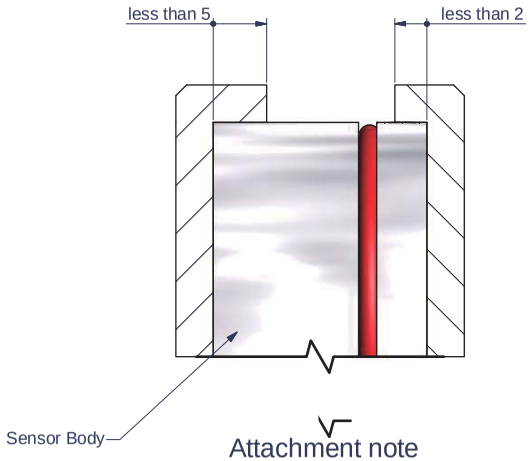

Attachment note

NOTES

1. Do not exceed interface depth, may cause damage.
2. Do not pull on a cable stronly.
3. Do not take off a seal
   If seal is taken off, sensor loses the characteristic
4.The housing has been grounded to protect it from external electric noise

PROJECTION	
DIMENSION	mm

ROBOTOUS
Advanced Technology for Human

DIMENSIONS
RFT40-SA01

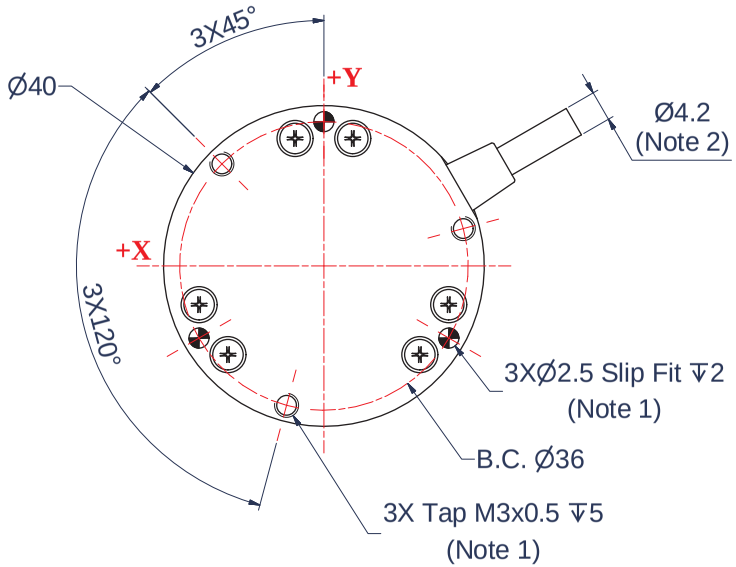

BOTTOM VIEW

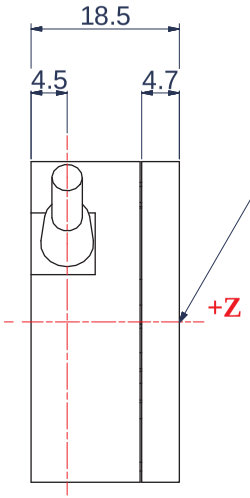

SIDE VIEW

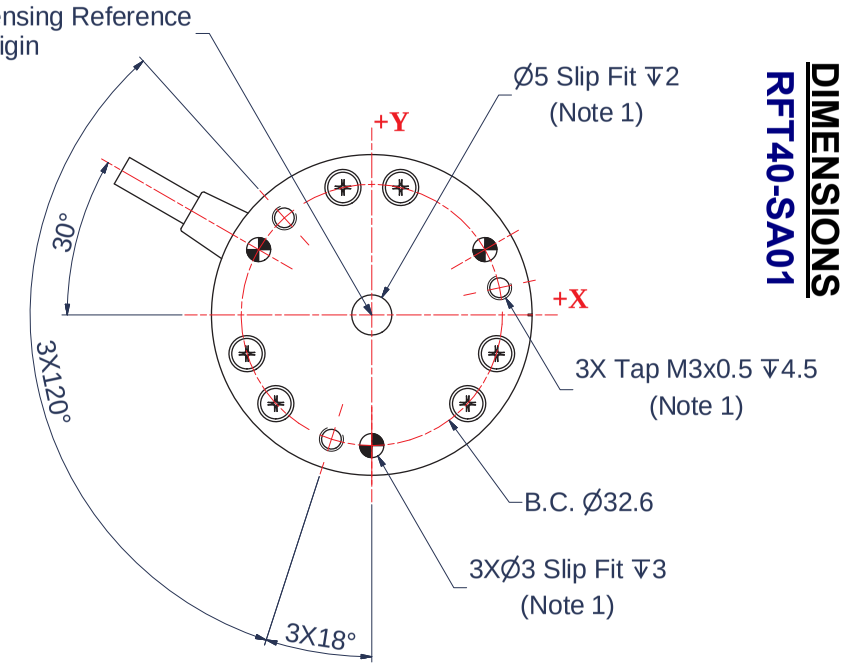

TOP VIEW

ISOMETRIC VIEW

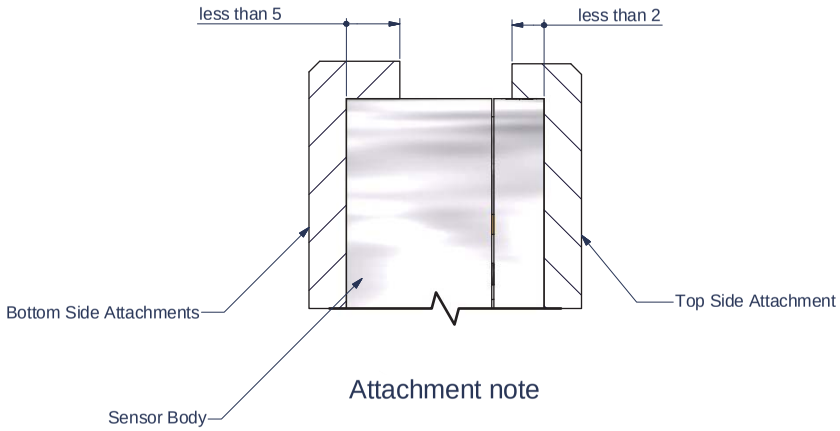

Attachment note

NOTES

1. Do not exceed interface depth, may cause damage.
2. Do not pull on a cable stronly.
3.The housing has been grounded to protect it from external electric noise

PROJECTION	
DIMENSION	mm

ROBOTOUS
Advanced Technology for Human